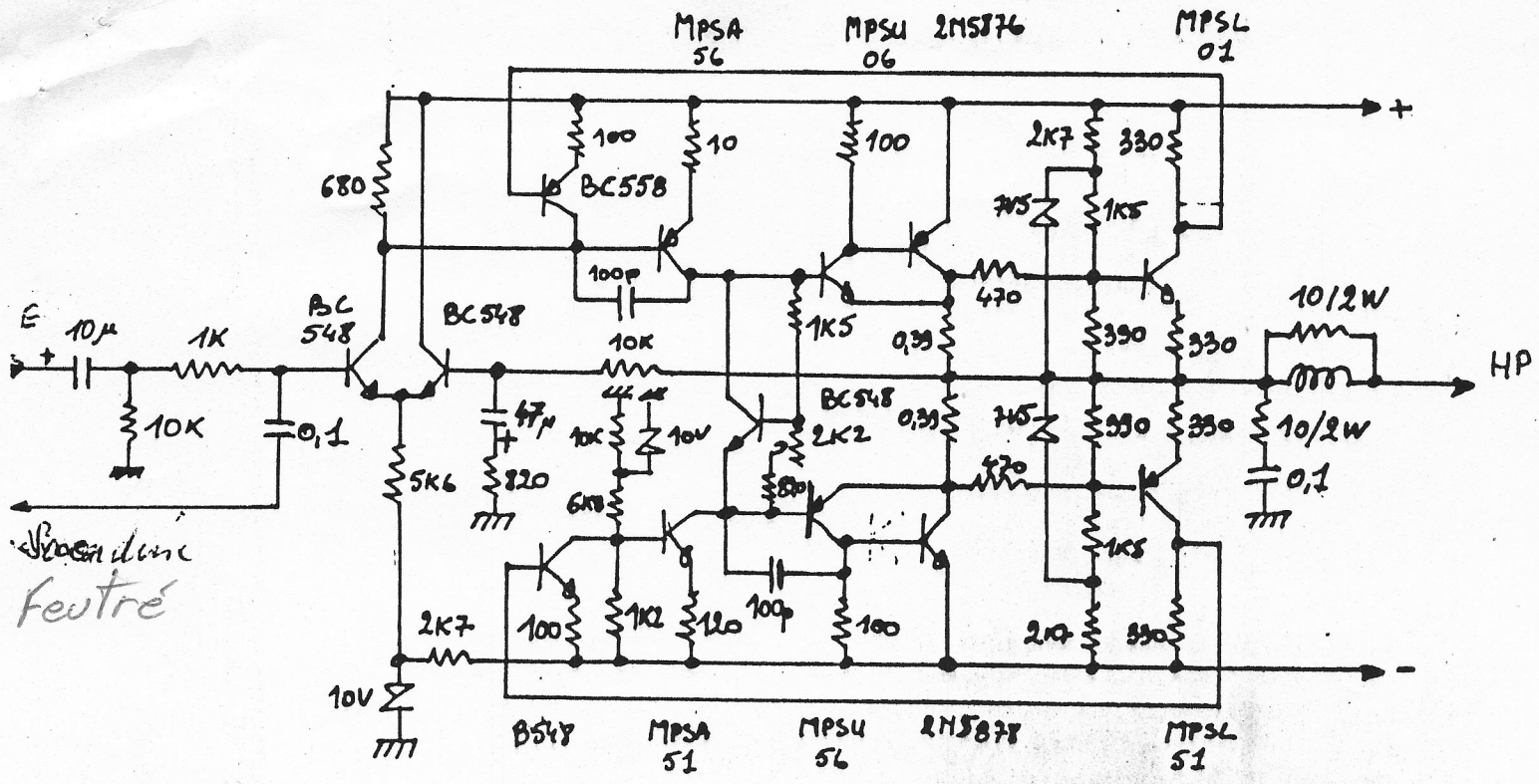
MPSA 56
MPSU 06
2N5876
MPSL 01
+
-
E
10µ
1K
10K
0,1
BC 548
BC548
680
5K6
47µ
820
100
10
BC558
100p
10K
1K5
0,39
470
2K7
330
745
1K5
390
330
10/2W
HP
10K
10V
6K8
2K2
820
1K2
120
100p
100
10V
B548
MPSA 51
MPSU 56
2N5878
MPSL 51
Vue du dessus
Feutré

JB 2 - 83

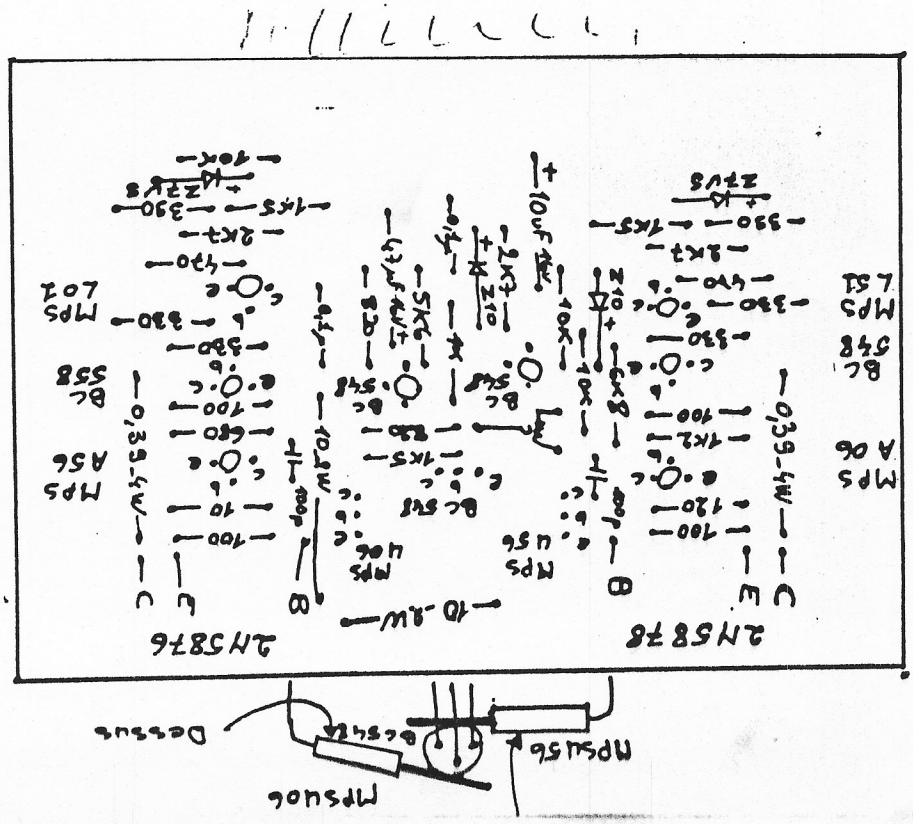
2N5876
2N5878
10 µH
MPSU06
MPSU56
Dessus